Electrolux PROFESSIONAL

Planetary Mixers
Planetary Mixer, 20 lt. - Table Model

ITEM #

MODEL #

NAME #

SIS #

AIA #

600238 (XBM20TB)	20 lt Planetary Mixer, bowl detection device and SOLID BPA free safety screen, with mechanical speed variation. Table Top model. Equipped with spiral hook, paddle and whisk
600239 (XBM20T3)	20 lt Planetary Mixer, bowl detection device and SOLID BPA free safety screen, with mechanical speed variation. Table Top model. Equipped with spiral hook, paddle and whisk

Short Form Specification

Item No.

Table top model, suitable for all kneading, blending and whipping operations. Body in non-corrosive material with 20 litre 18/8 (AISI 302) stainless steel bowl. Powerful asynchronous motor (750 W) with mechanical speed variator (8 speed levels from 35 to 180 rpm). Water protected planetary system. Pivoting and removable wire safety screen. Water proof (IP55) and flat touch button control panel with 60 min. timer. A safety device will automatically stop the machine when the bowl is lowered. Removable and dismantled solid safety screen - made of a bisphenol-A free (BPA) copolyester. Bowl detction device allows the mixer to switch on only when the bowl and the safety screen are properly installed and positioned together. Adjustable feet for stability.
Supplied with 3 tools: spiral hook, paddle and whisk.

APPROVAL:

Main Features

- Professional beater mixer that provides all the basic mixer functions: kneading of all sort of pastes, mixing of semi-liquid products, emulsions and various sauces.
- Delivered with:
  -Spiral Hook, Paddle, Wire Whisk and Mixing Bowl for 20 lt
- Waterproof touch button control panel with timer setting and display.
- Mechanical speed variator.
- Wire safety screen fitted with a removable chute to add products while working, thus ensuring operator safety.
- Pivoting and removable wire safety screen for easier and better cleaning.
- Maximum capacity (flour, with 60% of hydration) 6 kg, suitable for 50-150 meals per service.
- Raising and lowering of the bowl controlled by lever with an automatic locking of the bowl when in the raised position.
- Safety device will automatically stop the machine when the bowl is lowered.
- Solid BPA-free safety screen, covering the stainless steel wire one, limits the flour and unsafe dust particles when used in bakery and pastry preparation.
- Bowl detection device allows the mixer to switch on only when the bowl and the solid safety screen are properly installed and positioned together.

Construction

- Body in non-corrosive material.
- Compact design for table top installations.
- Sturdy construction with mechanically welded strong metal frame.
- 302 AISI Stainless steel bowl - 20 lt. capacity.
- Asynchronous motor with high start-up torque.
- 8 speeds, from 35 to 180 prm, to be lever operated while the machine is working, according to the tool and the mixture hardness.
- Planetary movement based on self lubricating gears, eliminating any risk of leaks.
- Water protected planetary system (IP55 electrical controls, IP23 overall machine).
- Power: 750 watts.
- The solid safety screen and the stainless steel wire structure are both removable and dismantled for cleaning and are dishwasher safe.
- Adjustable feet to perfect stability.

Included Accessories

• 1 of Bowl 20 lt mixer	PNC 650121
• 1 of Whisk 20 lt	PNC 653109
• 1 of Spiral Hook 20 lt	PNC 653114
• 1 of Paddle 20 lt	PNC 653116

Optional Accessories

• Bowl 20 lt mixer	PNC 650121 ❑

• 10 lt reduction kit (bowl, spiral hook, paddle, whisk) for 20 lt planetary mixers	PNC 650122	❑
• Whisk 20 lt	PNC 653109	❑
• Spiral Hook 20 lt	PNC 653114	❑
• Paddle 20 lt	PNC 653116	❑
• Reinforced Whisk 20 lt (for heavy duty use)	PNC 653254	❑
• Stainless steel table for 20 lt planetary mixer	PNC 653434	❑

The company reserves the right to make modifications to the products without prior notice. All information correct at time of printing.

Planetary Mixers
Planetary Mixer, 20 lt. - Table Model

Front

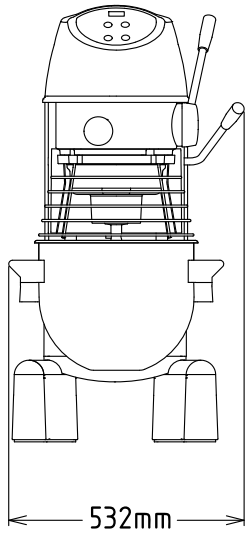

Side

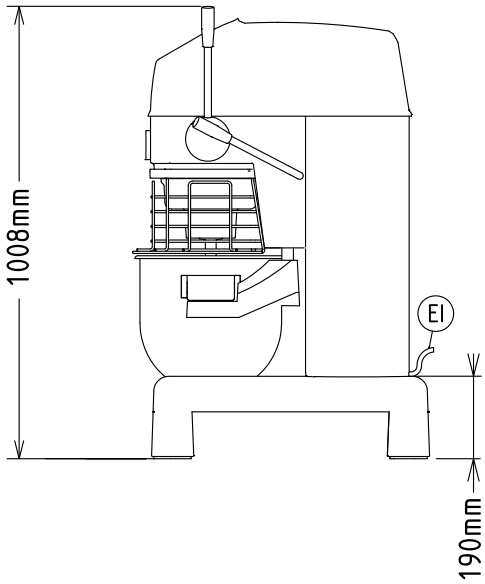

EI = Electrical inlet (power)

Top

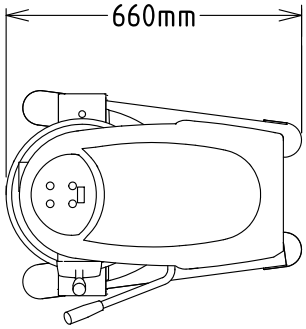

Electric

Supply voltage:	
600238 (XBM20TB)	220-240 V/1N ph/50 Hz
600239 (XBM20T3)	200-240/380-415 V/3 ph/50 Hz

Capacity:

Performance (up to):	6 kg/Cycle
Capacity:	20 litres

Key Information:

External dimensions, Width:	521 mm
External dimensions, Depth:	685 mm
External dimensions, Height:	1010 mm
Shipping weight:	
600238 (XBM20TB)	95 kg
600239 (XBM20T3)	94 kg
Cold water paste:	6 kg with Spiral hook
Egg whites:	32 with Whisk

The company reserves the right to make modifications to the products without prior notice. All information correct at time of printing.

2024.10.07